Solenoid Valves

Direct-acting, Normally Closed
Type 21TG, 1/8" and 1/4"

APPLICATION

Low cost direct-acting solenoid valve for on-off control of non-aggressive fluids and gases, air, oil, or water, compatible with materials of construction.

FEATURES

- Simple design - low-cost
- Choice of orifice sizes
- Compact design

TECHNICAL DATA

Functions:	Normally closed, energised to open
Ambient temp:	-10°C to +55°C
Fluid temp:	Maximum 140°C Viton
Viscosity:	Max. 53 Cst. 7°E
Materials:	Body and tube: brass; other inner parts: stainless steel; seal: Viton (V)
Coil voltage:	See page 26
Voltage tolerance:	+/-10%
Consumption:	DC: approx. 8 watts
Duty cycle:	100% continuous rating
Protection class:	IP 65 to DIN 40050 with correctly assembled connectors
Coil insulation:	Class F

DIMENSIONS (mm)

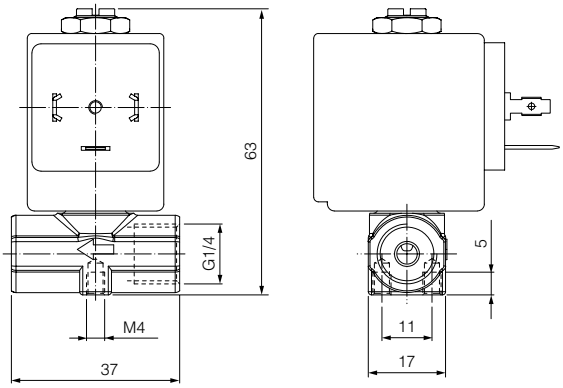

FLOW & PRESSURE RATING CHART (bar)

Pipe	Code	Max Viscosity Cst	Max Viscosity °E	Ø mm	Kv m³/h	Power Watt	Min.	Pressure bar M.O.P.D. AC	Pressure bar M.O.P.D. DC
G 1/8"	21TG1KR0V17	37	~5	1.7	0.09	8	0	30	20
	21TG1KR0V22			2.2	0.12			20	15
	21TG1KR0V28	53	~7	2.8	0.21			14	10
	21TG1KR0V40			4	0.30			6	3
G 1/4"	21TG2KR0V17	37	~5	1.7	0.09			30	20
	21TG2KR0V22			2.2	0.12			20	15
	21TG2KR0V28	53	~7	2.8	0.21			14	10
	21TG2KR0V40			4	0.30			6	3

Solenoid Valves

Direct-acting, Normally Closed or Open
Type 21A, 1/8" - 1/2"

APPLICATION

Direct-acting, two-way normally open or normally closed solenoid valve for on/off control of non-aggressive liquids and gases, e.g. air, oil, water, compatible with materials of construction. Port sizes G1/8" to 1/2"; for orifice sizes see table. Available seal materials NBR, Viton, and synthetic Ruby.

FEATURES

- Normally open or normally closed
- Manual override available
- Wide choice of orifice sizes and seal materials
- Easy coil replacement
- Wide range of coils

TECHNICAL DATA

Functions:	2-way normally open (code Z) or normally closed (code K)
Port sizes:	G1/8", 1/4", 3/8" and 1/2"
Ambient temp:	-20°C to +55°C
Fluid temp:	-10°C to max. temp. shown in tables
Viscosity:	Max. 37 Cst. 5°E
Materials:	Brass body, tube and tube nut of stainless steel; metal to metal seal between tube and body, except normally open or manual override versions, which employ 'O'-ring seals
Coil voltage:	See page 26
Voltage tolerance:	+/-10%(+10% -5% on pure DC)
Duty cycle:	100% continuous rating
Protection class:	IP 65 to DIN 40050 with correctly assembled connectors
Response time:	10 to 30 ms
Cycling frequency:	Max. 1500 cpm
Orifice sizes:	G1/8": 1.5mm, 2.0mm, 2.5mm, 3.0mm G1/4": 1.5mm, 2.0mm, 2.5mm, 3.0mm, 4.5mm, 5.5mm G3/8" and 1/2": 4.5mm, 5.5mm

SEAL MATERIALS (All sizes)

B (NBR)	Max. 90°C	Natural gases and fluids
V (Viton)	Max. 130°C	Oils, petrol, hot water, steam
R (Ruby)	Max. 180°C	Steam (max. 9 bar) Max. 3mm orifice

COIL CONSUMPTION

Description	Standard High Temp.	12 Watt	14 Watt
Inrush current, VA (AC)	25	35	43
Holding current, VA (AC)	14	25	27
Power consumption W (AC/DC)	8	12	14

COIL TYPES

Standard	max. temp. 120°C	Protection class IP65
High Temperature	max. temp. 150°C	Protection class IP65
High Power	max. temp. 160°C	Protection class IP65

HOW TO ORDER

Example: 21A 2 K B 30 + voltage

VALVE TYPE

PORTS
3 G1/8"
2 G1/4"
5 G3/8"
8 G1/2"

FUNCTION
K-Normally closed
Z-Normally open

ORIFICE SIZES x 10
15 1.5mm
20 2.0mm
25 2.5mm
30 3.0mm
45 4.5mm
55 5.5mm

SEAL MATERIAL
B NBR
V VITON
R RUBY

Solenoid Valves

Direct-acting, Normally Closed or Open

Type 21A, 1/8" - 1/2"

FLOW AND PRESSURE RATING CHART (bar)

Seal Type	Orifice mm	Kv (m^3/h)	Maximum Operating Pressure (bar)								
			Normally Closed K						Normally Open Z		
			Coil 8 watt		Coil 12 watt		Coil 14 watt		Coil 8 watt	Coil 12 watt	Coil 14 watt
			AC	DC	AC	DC	AC	DC	AC & DC	AC & DC	AC & DC
V	1.5	0.08	30	18	-	-	40	30	25	-	25
B			30	18	-	-	50	40	25	-	40
R			35	15	-	-	-	-	30	-	30
V	2.0	0.12	22	16	35	30	35	30	20	-	30
B			22	16	35	30	40	30	20	-	32
R			25	9	-	-	-	-	24	30	30
V	2.5	0.15	14	9	30	25	30	25	14	-	17
B			14	9	30	25	30	25	13	-	17
R			14	5	-	-	-	-	15	17	-
V	3.0	0.18	10	6	25	18	25	20	10	15	15
B			10	6	25	18	25	20	10	15	15
R			10	4	-	-	-	-	10	15	15
V	4.5	0.38	5	2	12	7	12	8	4	6	6
B			5	2	12	7	12	8	4	6	6
V	5.5	0.54	3	1	7	2.5	10	5	2.5	3.5	3.5
B			3	1	7	2.5	10	5	2.5	3.5	3.5

DIMENSIONS (mm)

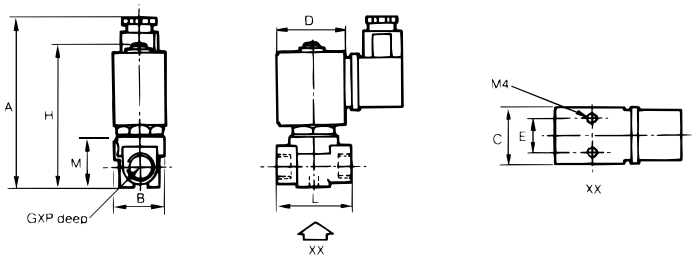

Size G	Coil Type	B	C	D	E	M	H	A	P	L	Weight Kg
1/8"	8 watt	28	31	42	16	28	78	91	7	41	0.32
	14 watt		52	55				91			0.60
1/4"	8 watt	28	31	42	16	28	78	91	7	41	0.32
	14 watt		52	55				91			0.60

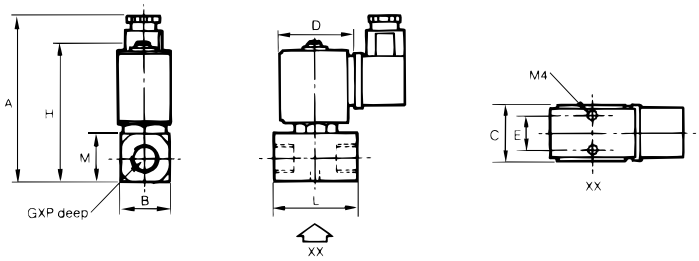

Size G	Coil Type	B	C	D	E	M	H	A	P	L	Weight Kg
3/8"	8 watt	26	31	42	16	28	76	89	10	44	0.37
	14 watt		52	55				89			0.65
1/2"	8 watt	26	31	42	16	28	76	89	14	59	0.40
	14 watt		52	55				89			0.68

Solenoid Valves

Direct-acting, High Pressure, Normally Closed
Type 21A, 1/4”

APPLICATION

Direct-acting 2-way solenoid valve for on-off control of non-aggressive liquids and gases, eg. air, oil and water for pressures up to 100 bar.

FEATURES

- Normally closed
- Coil replacement without exposing line fluid

TYPES AVAILABLE

G1/4” with 8 watt and 12 watt coils

TECHNICAL DATA

Ambient temp:	-10°C to +80°C
Fluid temp:	-10°C to +180°C
Viscosity:	Max. 21 Cst. 3°E
Materials:	Body: brass
Seal:	PTFE
Coil voltage:	See page 26
Voltage tolerance:	+10% -5% DC +10% -15% AC
Duty cycle:	100% continuous rating
Protection class:	IP 65 to DIN 40050 with correctly assembled connectors

Coil	Power Absorption			Dimensions		
W =	Inrush VA~	Hold VA~	Type mm	D mm	E mm	F mm
8W	25	14.5	B	30	42	54
12W	35	14.5	U	36	48	60

DIMENSIONS (mm)

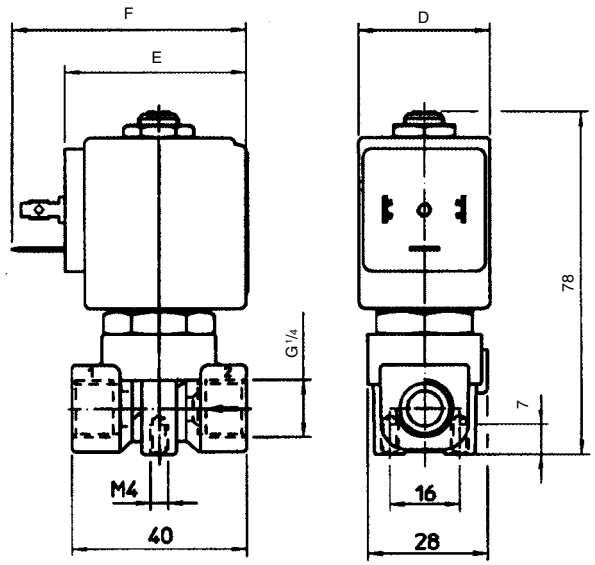

FLOW & PRESSURE RATING CHART (bar)

Code	Ports	Orifice	Watt	Min	AC	DC	Kv*
21A2K0T12-XC	1/4”	1.2	8	0	100	90	0.06
21A2K0T12-XC	1/4”	1.2	12	0	100	100	0.06

*Kv measured in m^3/h water at 1 barΔP

Solenoid Valves

Servo-acting, Piston Control, High Pressure, Normally Closed
Type 4, 3/8" - 3/4"

APPLICATION

Servo-acting piston valves for control of high pressure media. A minimum of pressure drop is required to ensure satisfactory operation. Maximum pressure is 100 bar.

FEATURES

- Available in normally closd and normally open
- Coil replacement without exposing fluid

TYPES AVAILABLE

G3/8" normally closed
G1/2" normally closed and open
G3/4" normally closed

TECHNICAL DATA

Ambient temp:	-10°C to +80°C
Fluid temp:	-40°C to +100°C
Viscosity:	Max. 21 Cst. 3°E
Materials:	Body: brass; inner parts: brass and stainless steel
Seal:	PTFE, PBT, POM C
Coil voltage:	See page 26
Duty cycle:	100% continuous rating
Protection class:	IP 65 to DIN 40050 with correctly assembled connectors

DIMENSIONS (mm)

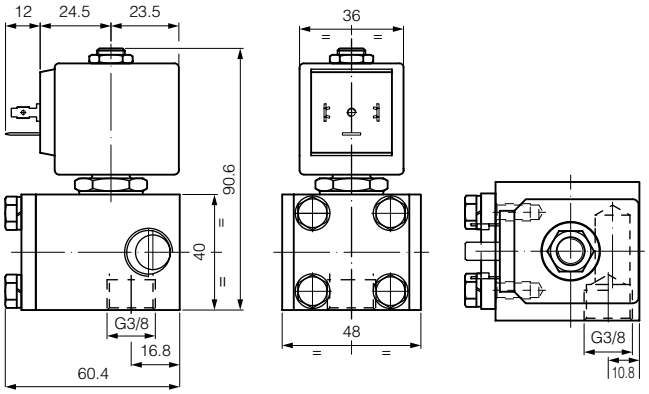

Code	Ports	A mm	B mm	C mm	F mm	G mm
4731K0T70	3/8"	90.6	40	42	60.4	48
4731K0T70	3/8"	90.6	40	48	60.4	48
4731K0T70	3/8"	90.6	40	54.5	60.4	48
4966K0Q120	1/2"	107.5	57.3	42	64	50
4966K0Q120	1/2"	107.5	57.3	48	64	50
4966Z0Q120D	1/2"	107.5	57.3	42	64	50
4592MZU190	3/4"	122.5	75	54.5	89	52

FLOW & PRESSURE RATING CHART (bar)

Code	Ports	Orifice	Watt	Min	AC	DC	Kv*
4731K0T70	3/8"	7	8	0.7	90	40	0.84
4731K0T70	3/8"	7	12	0.7	100	90	0.84
4731K0T70	3/8"	7	14	0.7	100	100	0.84
4966K0Q120	1/2"	12	8	3	100	90	3.6
4966K0Q120	1/2"	12	12	3	100	100	3.6
4966Z0Q120D	1/2"	12	8	3	50	50	3.6
4592MZU190	3/4"	19	14	1	-	50	6.6

*Kv measured in m^3/h water at 1 barΔP