ANTIPOLLUTION

Protection of potable water networks

Academy training Watts UK April 26th-28th

WATTS®

watts.com

Potable Water Networks

Water is the most precious of our natural resources. Considered unlimited for a long time, its uses for domestic, agricultural, irrigation or industrial needs have multiplied significantly.

In the past 60 years, our consumption of water has increased six-fold.

Now more than ever before, preserving our natural resources is the biggest challenges of the future decades. The water we use every day is distributed through an ever-increasingly complex network of interconnected pipelines, causing a major risk of pollution

The risks of backflow

During its use in the distribution system, the water intended for human consumption is exposed to flow and pressure variations.

These variations may cause a reversal of the normal direction of the water flow, due an upstream negative pressure (**BACKSIPHONAGE**) or a downstream **BACKPRESSURE**: this is what is known as **water backflow**.

The water coming from the contaminated network can thus pollute a drinking water network.

BACK SIPHONAGE is the reverse flow of water resulting from negative or sub atmospheric pressures in the distribution piping of drinking water supply system.

Back siphonage can occur, for example when a pipe bursts, booster pumps is operated, or a fire hydrant is opened.

BACKPRESSURE is a backflow caused by a downstream pressure that is greater than the upstream or supply pressure in a public water system.

Household appliances or devices situated in indoor installation, such as hearting or air conditioning systems connected to the drinking water system without suitable protection may create a higher pressure than the public water system.

This may lead to a reversal of the direction of the flow, and thus pollution.

Back siphonage

Back siphonage may occur due to a loss of pressure upstream in the municipal potable water supply due to :

- ✓ The bursting of a pipe
- ✓ An excessive water demands in a part of the system
- ✓ Water taken for emergency use from a hydrant

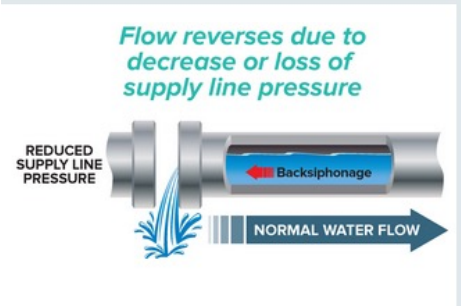

Back pressure / Overpressure

Back pressure : can be created when a source of pressure (such as a boiler/booster pump) creates a pressure greater than the pressure supplied by the public water system

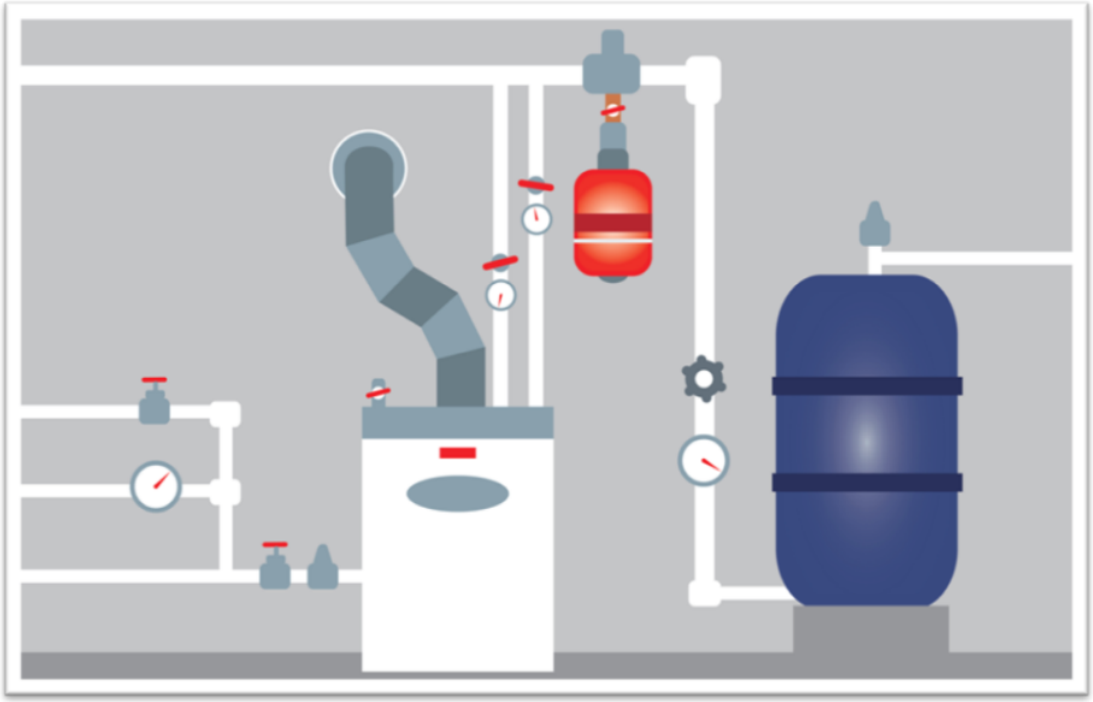

EN1717

What is it about ?

Protection of drinking water against pollution of potable water in water installations and general requirements of devices to prevent pollution by backflow.

To ensure optimal network, the protection unit chosen must correspond to the risk level of the fluid and it must comply with the health and safety requirements.

The EN 1717 gives general guidelines on the types of backflow protection devices available, and the situations where they can be used. The approach is based on an assessment of the risk of backflow from each point of use (within a water supply installation), and a choice of the appropriate type(s) of backflow prevention device

The main objective is to reduce the risk of contamination of the public water supply from backflow of any fluid: BS EN 1717.pdf

- Fluids are classified by categories from fluid category 1 to fluid category 5
- A protection matrix specifies the maximum level of protection for every protection device, providing the most adequate security.

How is water backflow prevented?

Protection against water backflow is ensured by the installation and the maintenance of safety devices called “backflow protection units”

There are several types of devices, each using a particular principles of operation and protection.

Optimum safety is based essentially on 4 parameters:

1. The choice of protection set according to the risk;
2. The compliance of the protection unit with the health and safety requirements;
3. Its location as close as possible to the potential source of pollution;
4. Regular maintenance by qualified people

Fluids categories







Category 5
Fluid representing a serious health hazard because of the concentration of pathogenic organisms, radioactive or very toxic substances

Category 4
Water or fluid representing a significant health hazard because of the concentration of toxic substances

Category 3
Water or fluid representing a slight health hazard because of the concentration of substances of low toxicity

Category 2
Water or fluid presenting no danger to health

Category 1
Potable water complying with reference standards

Class	Definition	Examples
5	Liquid substance that poses a threat to human health due to the presence of pathogenic bacteria or viruses	Rinsing water for dishes and cooking equipment, sewer and wastewater, animal drinking water, swimming pool water
4	Liquid substance that can harm human health to a certain degree due to the presence of one or more toxic or highly substances	insecticides
3	Liquid substance that can harm human health to a certain degree due to the presence of one or more toxic or highly substances	Rinsing water for dishes and cooking equipment, central heating water without additives, water in the toilet cistern, softened water
2	Liquid substance that does not threat human health. Liquid substance of which is determined that it is suitable for human consumption, including water obtained from a drinking-water distribution system, and which may undergo a change of taste, odor, color or temperature	Cooled water, hot water, demineralized water, preparation of foods, coffee, tea
1	Water intended for human consumption, originating from a drinking water distribution system	Drinking water, water under high pressure

The antipollution range tailored for your installations

BA type controllable reduced pressure zone backflow preventers are designed to protect the drinking water networks against the risk of backflow, preventing back flow and providing protection up to fluid category 4 by shutting off the water supply by draining the fluid into the sewer.

CAa and CAb type non controllable backflow preventers with reduced pressure zone are used to protect systems in contact with category 3 fluids. They consist of two check valves separated by a chamber communicating with the atmosphere, which enables the upstream and downstream circuits to be separated if backflow occurs, thus protecting the potable water network.

HA type anti-siphon devices are designed to fit on all hose union taps between the hose and the spout of the tap, and protect against the backflow of category 2/3 fluids.

HD anti-siphon devices enable shower hoses to be disconnected from mixing taps, and protect against the backflow of category 2/3 fluids.

EA type controllable anti-pollution valves protect potable water networks against the backflow of fluids that pose no toxic or microbiological hazards for human health (category 1 and/or 2). Their installation must necessarily be combined, immediately upstream, with an isolation device (stop valve) as well as a control device (test valve) placed on a boss upstream.

EB type insert check valves are safety devices that prevent backflow and protect the potable water network. These valves are specially designed to be incorporated in a finished product which requires EA type protection against the risks of pollution of drinking water, or in water meters equipped with a backflow preventing system.

Double check valves ensure an excellent high and low pressure watertight seal.

DA type vacuum breaker valves are especially designed for overflow supply. Used for rising vertical fluid. If the pressure drops, they prevent the water being drawn back into the potable water network. Category 3 fluid protection.

Protection Matrix

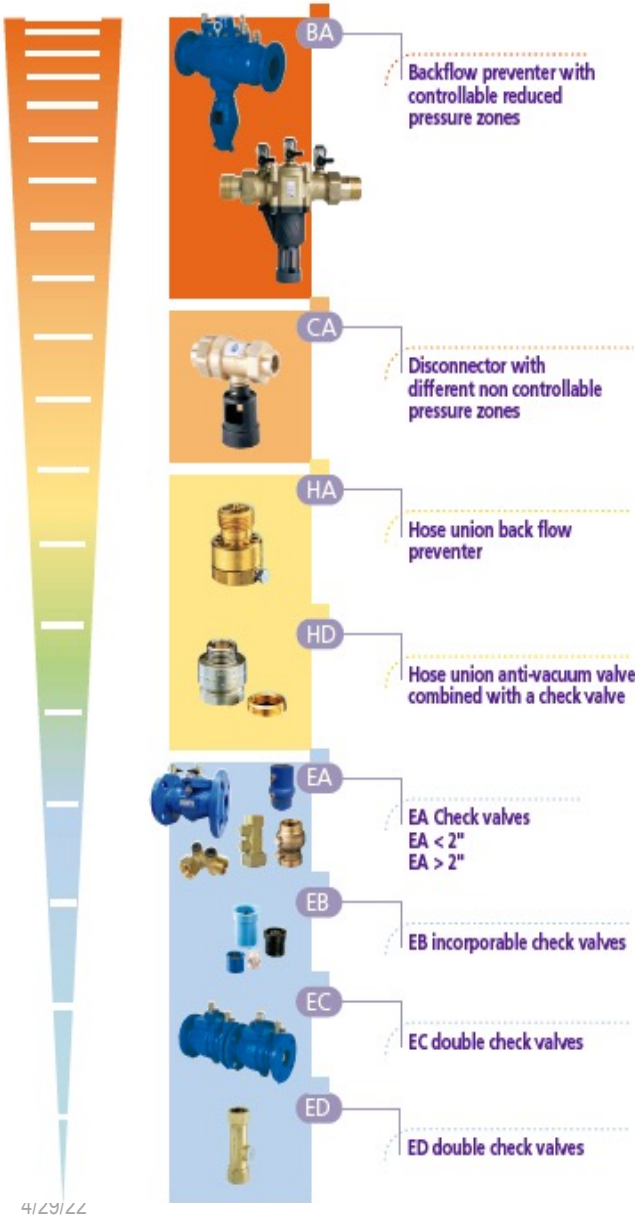

	Protection unit EN 1717	Fluid category 1	2	3	4	5	Product standard
BA	Controllable backflow preventer with reduced pressure zone	✔	✔	✔	✔		EN 12729
CA	Non controllable backflow preventer with different pressure zones	✔	✔	✔			EN 14367
HA	Hose union backflow preventer	✔	✔	●			EN 14454
HD	Hose union anti-vacuum valve combined with a check valve	✔	✔	●			EN 15096
DA	In-line anti-vacuum valve	●	●	●			EN 14451
EA	Controllable anti-pollution check valve	✔	✔				EN 13959
EB	Non-controllable anti-pollution check valve	Only permitted for specific applications and protection of domestic water systems					EN 13959
EC	Controllable anti-pollution double check valve	●	●				EN 13959
ED	Non-controllable anti-pollution double check valve	Only permitted for specific applications and protection of domestic water systems					EN 13959

✔: Covers the risk / ● : Covers the risk if p=atmosphere / ■ : Fails to cover the risk

Protection device – BA type

Backflow Preventer <u>with controllable</u> reduced pressure zones type (RPZ)

Protect drinking water systems from backflow of liquids in hazard class 4 (according to EN 1717 – EN12729)

Application
Professional networks : Industries, winery and farms, commercial malls... **Sanitary networks :** Hospital, laboratories, water treatment,... **Technical networks:** Heating, Cooling HVAC , sprinkler system**…** **Irrigation networks** : Watering system..

BS EN 12729:2002
Devices to prevent pollution by backflow of potable water – Controllable backflow preventer with reduced pressure zone – Family B – Type A – British Standard, which includes theType BA devices

Our Value Proposition
• **A wide range suitable for all drinking water installation** • **Excellent tightness at high and low pressure** • **High hydraulic performances** • **Easy to maintain**

BABM Video

https://wattswater.eu/catalog/antipollution-devices/backflow-preventers/backflow-preventer-ba-bm-for-dn15-dn50/

BA BM – DN ½ to 2 " / DN 15 to 50

Backflow Preventer with controllable reduced pressure zones type BA

Protect drinking water systems from backflow of liquids in hazard up to class 4 developed in accordance with EN1717 and EN12729

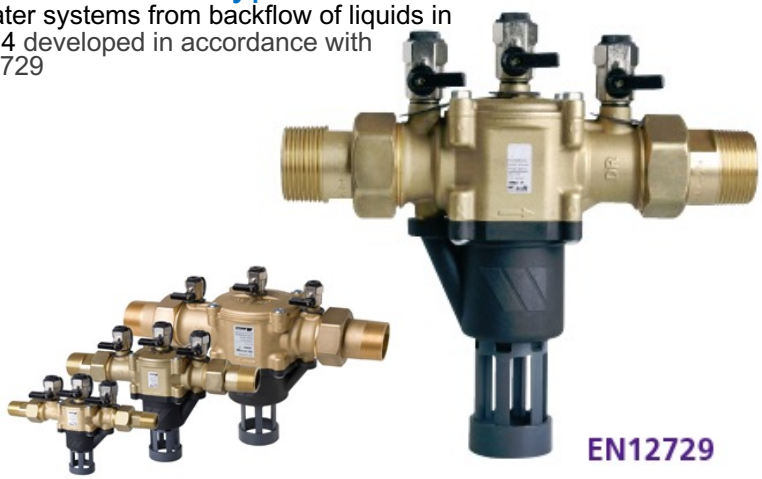

Application

- **Primary circuits and central heating (heat output greater than 70kW)**
- **HVAC system**
- **Fire sprinkler using anti-freeze solutions**
- **Irrigation systems**
- **Food processing**
- **Catering : washing apparatus , refrigerating equipment**
- **Industrial & commercial installation: car washing , cloth washing. Dyeing equipment**

Our Value Proposition

- **Piston technology valve, without diaphragm**: easy to assemble and disassemble (no membrane to reposition)
- **Very easy maintenance and total accessibility** of working parts on-site: by removing the cover and spacer : the check valves can be reached instantly
- **Compact construction** ensuring a minimum footprint.
- **Excellent performances with reduced head losses.**
  Longer reliability: non-incrustation discharge valve and check valves
- **High performance materials** DZR brass

Technical specification

- **DN15 to DN50**
- **Maximum operating temperature 65°**
- **Maximum operating pressure 10 bar**
- **Developed in accordance with EN 1717 and EN 12729**

Approvals

- **KIWA, NF, ACS, Belgaqua, WRAS, VA**
- **DVGW (KTW/W270), UNI, Veritas, SINTEF, SVGW**

BA 4760 – DN 2 ½ to 10 " / DN 65 to 250

Backflow Preventer with controllable reduced pressure zones type BA

Protect drinking water systems from backflow of liquids in hazard up to class 4 developed in accordance with EN1717 and EN12729

Application

- **Primary circuits and central heating (heat output greater than 70kW)**
- **HVAC system**
- **Fire sprinkler using anti-freeze solutions**
- **Irrigation systems**
- **Food processing**
- **Water treatment system**

Our Value Proposition

- **Robustness and long-lasting life**
- **Excellent hydraulic performances (High Kv)**
- **Total accessibility** : first, second and relief valve can be exchanged without much efforts, providing an easy maintenance
- **Highly reliable**
- **High performance materials** casing in cast iron with epoxy coating , NBR (nitrile) membrane,

Technical specification

- **DN65 to DN250**
- **Maximum operating temperature 65°**
- **Maximum operating pressure 10 bar**
- **Developed in accordance with EN 1717 and EN 12729**

Approvals

- **KIWA, NF, ACS, Belgaqua, WRAS, VA, UNI**
- **DVGW (KTW/W270) : in progress**

Installation Rules

The RPZ valve shall be installed in accordance with the technical rules for drinking water installations BS EN 1717

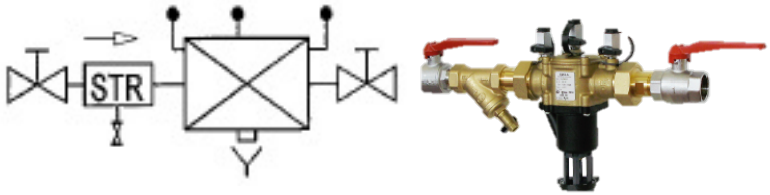

- above the floor level at a height that enables effective inspection, testing and maintenance.
- must be installed horizontally with the relief valve discharging downwards
- An in-line strainer shall be installed upstream of the RPZ valve to prevent any fouling of the elements of the assembly.

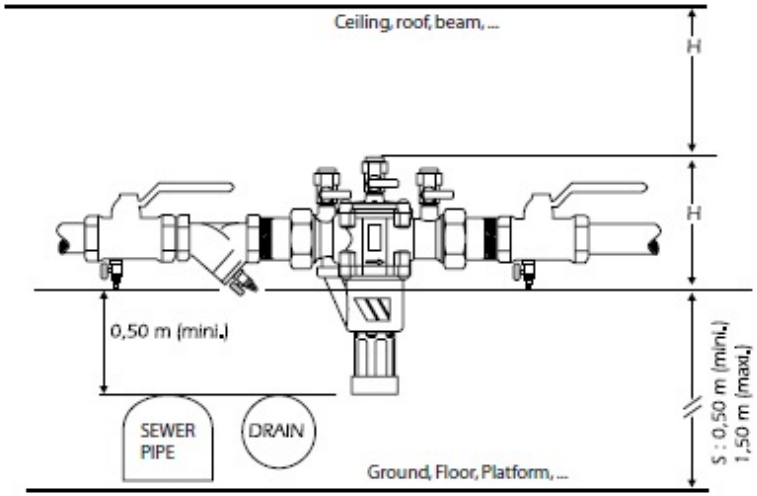

- RPZ valves shall not be installed in a place or position which is:
  - liable to flooding
  - above electrical equipment
  - liable to mechanical or other damage
  - exposed to freezing, unless measures are taken to prevent the assembly from freezing
  - concealed

- Installation of a backflow preventer BA
- shall be carried out by qualified personnel

Installation

Testing & commissioning

According to BS EN 1717 a BA-unit shall be tested periodically, in most countries on an annual basis. Accordingly, a maintenance contract should be concluded for the annual maintenance between the operating organization and the plumber.

Commissioning and testing of a BA-unit must only be carried out by an accredited tester

Repair kits are available and allow specific replacement of the defective function on the BA type backflow preventer. :

SPARE PARTS FOR BACKFLOW PREVENTER

Components: 1 upstream valve, 1 downstream valve, 1 discharge valve
Packing: 1 kit by box (For any order, please give the serial number of the product).

Reference	DN "	DN mm	Designation	Box/ carton
149B1391	1/2	15	KIT FOR BABM	1
149B1391	3/4	20	KIT FOR BABM	1
149B1393	1	25	KIT FOR BABM	1
149B1393	1 1/4	32	KIT FOR BABM	1
149B1395	1 1/2	40	KIT FOR BABM	1
149B1395	2	50	KIT FOR BABM	1

Reference	DN "	DN mm	Designation	Box/ carton
149B19	2 1/2	65	KIT FOR BA4760	1
149B20	3	80	KIT FOR BA4760	1
149B21	4	100	KIT FOR BA4760	1
149F017922	6	150	KIT FOR BA4760	1
149B25	8	200	KIT FOR BA4760	1
149B25	10	250	KIT FOR BA4760	1

Testing kit & maintenance kit for servicing BA on site

According to standard NF P 43018 the anti-pollution devices must be checked using a standardized control system kit. This equipement must be regularly checked at least once every two years.

BACKFLOW PREVENTER TESTING KIT

Testing kit.
Comes in a shockproof case with manual, electronic pressure gauge calibration certificate and maintenance procedure.
For backflow preventers type BA: ø 15mm to 250 mm
Approval: NF

Reference	Designation	Box/ carton
149BMC1022	KIT	1

Protection device – CAa type

Backflow Preventer with Non controllable reduced pressure zones type CA

Protect drinking water systems from backflow of liquids in hazard up to class 3 developed in accordance with EN1717 and EN14367 (CAa type)

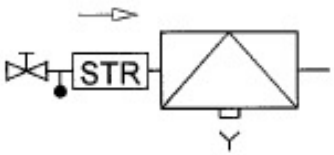

CA 9C

CA 2096 SOCLA

Application

To protect low risk or intermittent risk installations which nevertheless require a backflow prevention system : *domestic heating units < 70 Kw

- **Vending machines,**
- **Coffee Machines**
- **Water dispensers**
- **Commercial Dishwashers**
- **Some laboratory equipment...**

Kit Alim CA : For domestic central heating central units

- Save time : ready to install
- Safe: filling valve
- Practical : ball valve, mamonomer
- Comply with EN 1717 and EN14367 CA type
- NF

Our Value Proposition

- **Compact size**
- **Perfect tightness:** double check valves with an intermediate relief valve
- **High performance materials**
- **Comply with UBA positive list of material requirements**

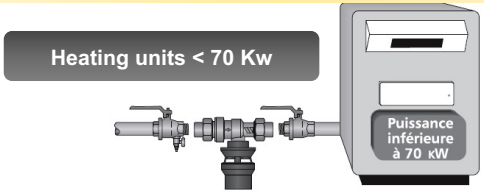

Technical specification

- **DN15 – DN20**
- **Maximum operating temperature 65°**
- **Maximum operating pressure 10 bar**
- **Developed in accordance with EN 1717 and EN 14367**

Approvals

CA 2096 : **NF, ACS Kiwa, Belgaqua, B. Veritas, WRAS : in progress**

CA 9C : **NF, ACS, Kiwa, Belgaqua**

Protection device – HA type
Hose union backflow preventer

Anti siphon Vacuum breaker type HA

Protect drinking water systems from backflow of liquids in hazard up to class 2 developed in accordance with EN1717

HA 8

HA 216 Socla

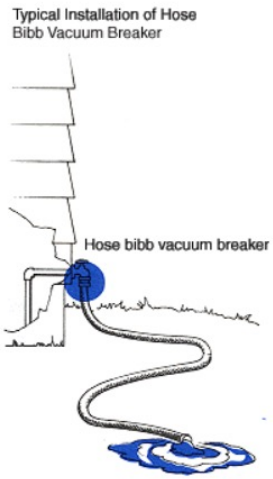

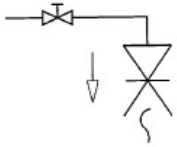

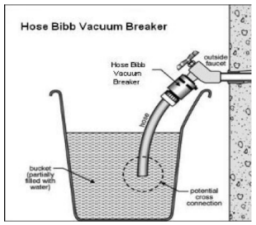

Application

Protection of drinking water networks :
Garden taps
for washing and watering taps outside the home.

- To be installed between the tap and the flexible hose
- Provided with anti-freeze device to allow emptying the valve.
- Brass body. Stainless steel spring

Technical specification

- **F/M ¾”**
- **Maximum operating temperature 60°**
- **Maximum operating pressure 10 bar**
- **Developed in accordance with EN 1717**

Approvals

HA216: NF, ACS, Belgaqua,

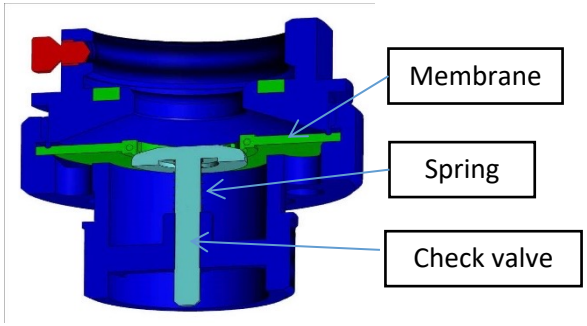

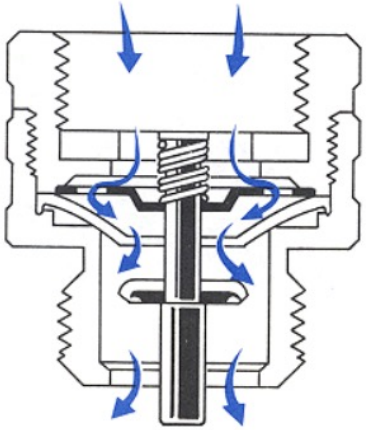

Protection device – HD type

Anti siphon Vacuum breaker type HD

Protect drinking water systems from backflow of liquids in hazard up to class 2 developed in accordance with EN1717

HD S8C - DAWS

HD 206 Socla

HD 9 - RU NFL

Application

Protection of drinking water networks :
Sanitary appliances
For shower or bath flexible hose, laboratory taps

- Double check valves with atmospheric vents with intermediate atmospheric connection.
- Recommended whenever there is risk of flowback when immersing a flexible hose in a bath or sink.
- Chrome-plated brass body. Stainless steel spring

Technical specification

- **F/M ¾”**
- **Maximum operating temperature 60°**
- **Maximum operating pressure 10 bar**
- **Developed in accordance with EN 1717**

Approvals

HD206: ACS

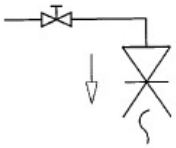

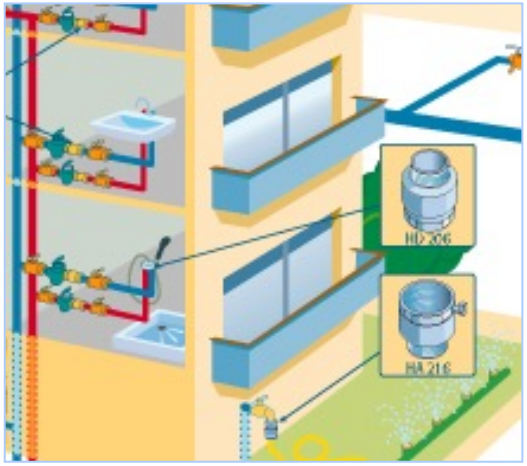

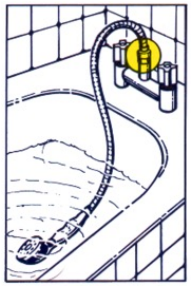

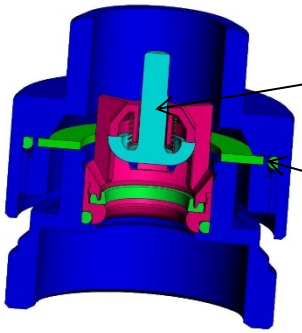

Protection device : 288 A

Anti-Siphon Pressure Vacuum Breakers

Anti-Siphon Vacuum Breakers prevent the reverse flow of polluted water from entering the potable water supply due to back siphonage.

Brass body construction

Chrome finished

Application

Protection of drinking water networks : Sanitary appliances
Series 288A Hot or Cold Water such as laboratory equipment.

- Full size orifice to assure pipe size capacity and provide high water flow with minimal pressure loss.
- Used for low flow, non-continuous hot or cold-water health hazard installations such as Maximum Pressure:8,6 bar (125psi)

Technical specification

- Chemical resistant silicone seat disc and an atmospheric vent to prevent spilling.
- a lightweight, durable “disc float” suitable for temperatures up to 82°C

Approvals

ASSE, ACS

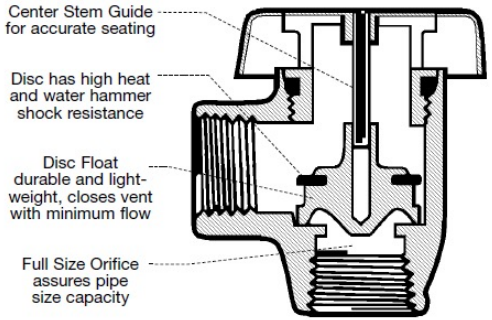

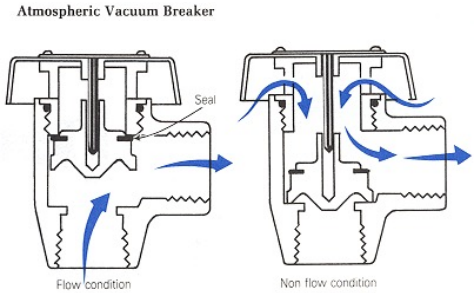

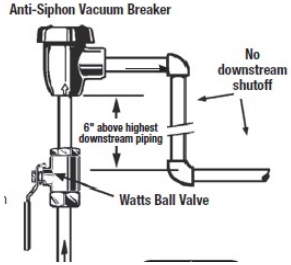

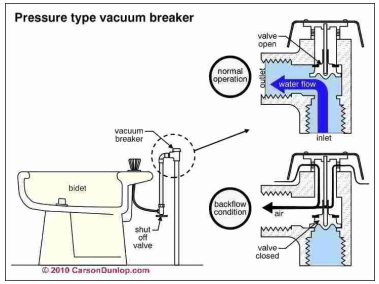

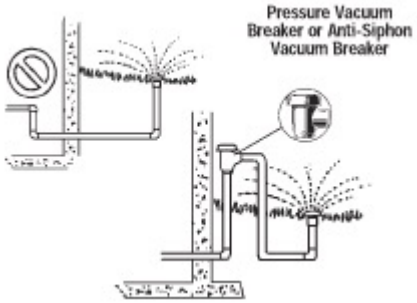

Protective device - EA type check valves

Système 01

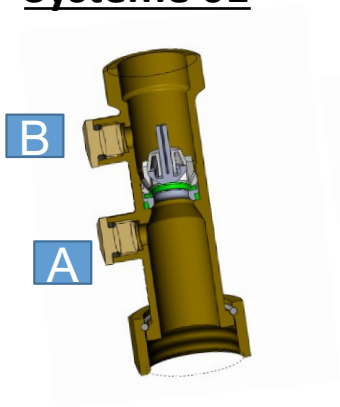

Système 03

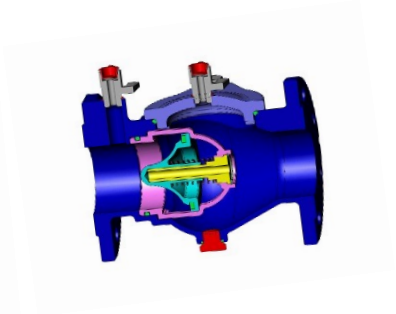

Anti-pollution & Controllable check valves

- Protect drinking water systems from contamination by polluted liquids do not present toxic or microbiological risks to human health.
- They must always be installed in conjunction with a means of isolation upstream (stopcock) and with a means of control positioned on a boss upstream.
- Fluids category class 1,2 (according to EN 1717–EN13959)

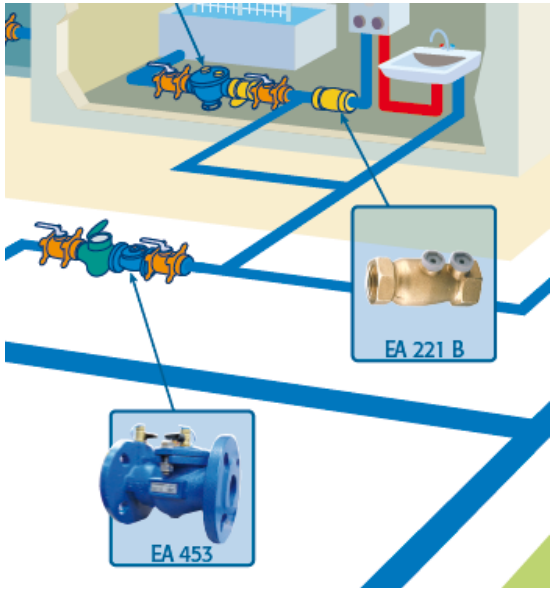

Application

Building
Water distribution,
Drinking water protection network.

Our Value Proposition

- **A wide range suitable for all drinking water installation**
- **Excellent tightness at high and low pressure**
- **High hydraulic performances**
- **Can be used in all position**
- **Easy to maintain**
- **Compliant to NF, Kiwa*, Belgaqua***
  (* see ranges concerned in catalogue)

Functionning principle

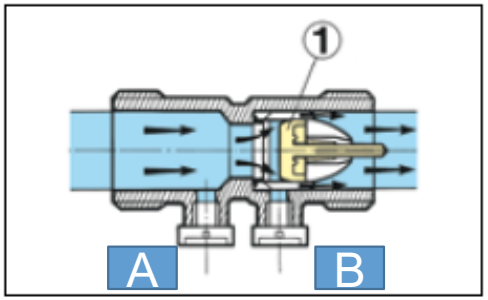

1 NORMAL OPERATION IN FLOW
The closing system ① is under pressure and opens. Flow goes through.

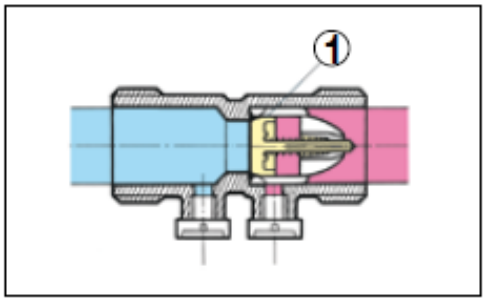

2 FLOW INTERRUPTED STATIC PRESSURE
The closing head ① seals by the force of the spring.

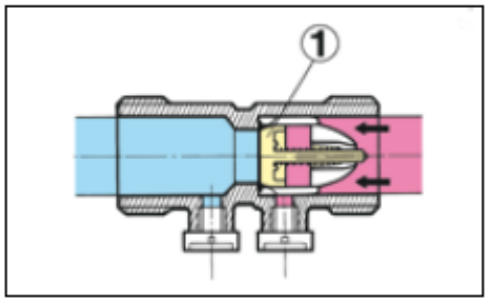

3 WATER TURNED BACK (LOSS OF PRESSURE OR PRESSURE SURGE)
The valve head ① closes instantly preventing any water returning from downstream to upstream.

A- **Upstream boss** ➔ Controls the water tightness of the CV, allows sampling to test quality
B- **Downstream boss** ➔ For emptying of system; internal sampling to control quality of used water

*According to EN13959 only A upstream boss is required.
Possible pipe purge thanks to downstream boss

Protective device – EA type – System 01

S

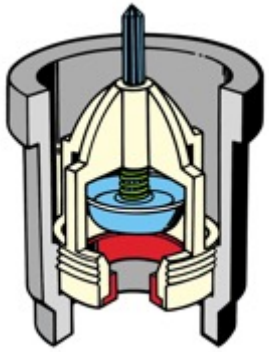

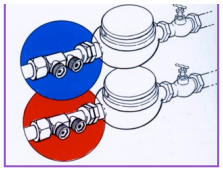

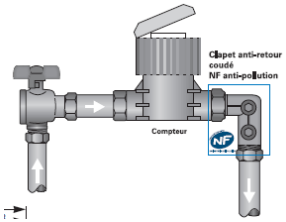

Our value proposition

- CV type EA < 2″
- Broad range
- **Water tight** under mini pressure of 3 cm water column up to 16 bar thanks to the O-ring
- Double axial & lateral guidance ensures perfect seat alignment
- **Minimum head losses**
- Return spring allows operation in **any position**
- Different **fitting offer**

Application
Water meter protection

	NF	ACS	Belgaqua	Kiwa	B Veritas
EA 251	✓	✓		✓	✓
EA291NF	✓	✓	✓		
EA 221B	✓	✓			✓
EA 271	✓	✓		✓	✓

Protective device - EA type – System 03

EA 453

EA 253

EA 223/D

EC 453/453

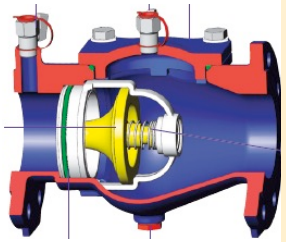

Our value proposition

- Check valve EA > 2″
- **Easy maintenance** & Inspection on site without product removal thanks to the inspection cover
  - Bosses with test cock allowing controls and sampling
- **Watertight** under mini pressure of 3 cm water column up to 16 bar thanks to the O-ring
- **Axial guidance** allows perfect alignment on seat which is ensuring high water tightness
- **No water hammer**
- Return spring allows operation in **any position**
- **Robust (cast iron)**
- Drain plug

Application

Distribution with booster, general and sanitary circuits

	NF	ACS	Belgaqua	Kiwa	B Veritas	God	WRAS
EA 453	✓	✓	✓	✓	✓		✓
EA 253	✓	✓	✓				
EA 223	✓	✓	✓	✓	✓		
EC453/453							✓

Protective device – EB type

Plastic Insert check valve - EB type

Protect drinking water systems from backflow of liquids in hazard up to class 2 developed in accordance with EN1717 and EN13959

EB 901 (IO)

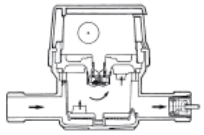

Valve for watermeter

EB 921

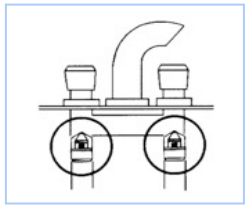

EB 911 (WM)

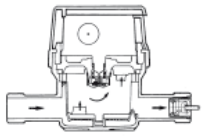

Valve for watermeter

EB 931

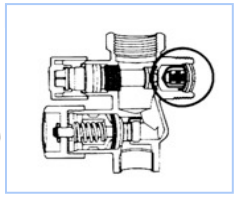

Insert cartridge check valve

Can be incorporated into **prefabricated equipment** whose function requires protection from risk of contamination of the drinking water system

Applications

Water meter, Boiler, vending machine, Tap and Mixing valves producers, Security group

	NF	ACS	Belgaqua	Kiwa	B Veritas	VdG GODKENDT
EB 901	✓	✓	✓	✓	✓	✓
EB 921		✓				
EB 911	✓	✓			✓	
EB 931	✓	✓				

Insert cartridges approvals

	ACS	AWQC	BELGAQUA	B. VERITAS	DVGW	KIWA	NF	NSF 61	SITAC	SVGW	VA	WRAS
CO - W1711B	15 ACC NY 054 12/03/2020		Belg 15/014/EB 13/01/2020		NW- 6312AS2276 30/06/2019	K6085/12 15/12/2020	412-M1-17/2 21/03/2017*	OUI	2565/92 16/12/2017		VA 1.55/18634-X 01/10/2019	1609303 30/09/2021
CS - W1711A DN15	16 ACC LY 345 19/08/2021		Belg 15/014/EB 13/01/2020		NW- 6312AS2276 30/06/2019	K6085/12 15/12/2020	412-M1-17/2 21/03/2017*		2565/92 16/12/2017		VA 1.55/18634-X 01/10/2019	
CS - W1711A DN100 - 150 - 250	15 ACC NY 117 27/04/2020		Belg 15/014/EB 13/01/2020		NW- 6312AS2276 30/06/2019	K6085/12 15/12/2020						
FW - W1713	15 ACC NY 054 12/03/2020		Belg 15/014/EB 13/01/2020		NW- 6312AS2276 30/06/2019	K6085/12 15/12/2020		OUI	2565/92 16/12/2017			
IN - W1712A	15 ACC NY 054 12/03/2020	OUI	Belg 15/014/EB 13/01/2020		NW- 6312AS2276 30/06/2019	K6085/12 15/12/2020	412-M1-17/2 21/03/2017*	OUI	2565/92 16/12/2017		VA 1.55/18634-X 01/10/2019	1512329 31/12/2020
IO - W1712B	15 ACC NY 054 12/03/2020	OUI	Belg 15/014/EB 13/01/2020		NW- 6312AS2276 30/06/2019	K6085/12 15/12/2020	412-M1-17/2 21/03/2017*	OUI	2565/92 16/12/2017	9703-3715 31/10/2022	VA 1.55/18634-X 01/10/2019	DN 25 - 1101801 - 31/01/2016 DN 20 - 1103030 - 22/03/2016 DN 32 - 1207305 - 31/07/2017 DN 15 - 1207306 - 31/07/2017 DN 50 - 1301301 - 31/01/2018
IW								OUI				
TO -W1714	17 ACC LY 095 30/05/2022	OUI	Nr Belg 15/014/EB 13/01/2020				412-M1-17/2 21/03/2017*		2565/92 16/12/2017		VA 1.55/18634-X 01/10/2019	
WI - W1715B			Belg 15/014/EB 13/01/2020		NW- 6312AS2276 30/06/2019			OUI	2565/92 16/12/2017			
WM - W1715A	15 ACC NY 054 12/03/2020		Belg 15/014/EB 13/01/2020		NW- 6312AS2276 30/06/2019	K6085/12 15/12/2020	412-M1-17/2 21/03/2017*	OUI			VA 1.55/18634-X 01/10/2019	1706318 30/06/2022

Thank you for your attention