Solenoid Valves

Direct-acting, Normally Closed, Stainless Steel
Types 21JP, 31JP, 1/8”

APPLICATION

Normally closed solenoid valve with body and metal parts pf stainless steel. Ports G1/8”.

FEATURES

- Choice of orifice sizes
- Compact design
- Low wattage coil
- 2-way and 3-way types

Types 21JL

Type 31JL

TECHNICAL DATA

Functions:	Normally Closed
Ambient temp:	-10°C to +60°C class F coil -10°C to +80°C class H coil
Fluid temp:	-10°C to +140°C NBR
Viscosity:	Max. 21 Cst. 3°E
Materials:	Body and tube: 316 stainless steel; plunger in stainless steel
Seal:	Viton
Coil voltage:	See page 26
Voltage tolerance:	+10% -5% DC
	+10% -15% AC
Duty cycle:	100% continuous rating
Protection class:	IP 65 to DIN 40050 with correctly assembled connectors

Coil	Power Absorption		Type	Dimensions		
W =	Inrush VA~	Hold VA~		D mm	E mm	F mm
5W	15	10	L	22	27.5	39.5

FLOW & PRESSURE RATING CHART (bar)

Code	Ports	Orifice	Watt	Min	AC	DC	Kv*
21JL1RV12	1/8”	1.2	5	0	25	12	0.06
21JL1RV23	1/8”	2.3	5	0	18	8	0.126
31JL1XP1V12	1/8”	2.3	5	0	15	-	0.045

*Kv measured in m^3/h water at 1 barΔP

DIMENSIONS (mm)

21JL

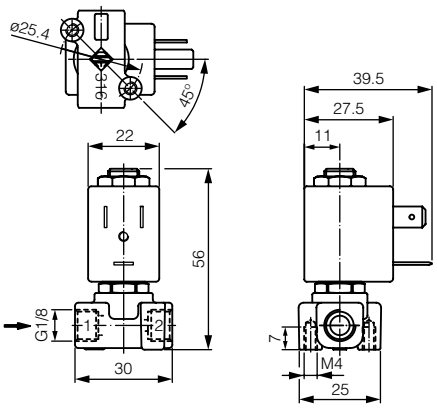

31JL

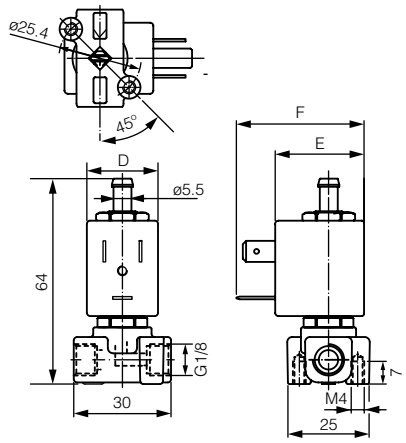

Solenoid Valves

Direct-acting, Normally Closed, Stainless Steel
Type 21L1, 1/8”

APPLICATION

Normally closed solenoid valve with body and metal parts of stainless steel. Ports G1/8”.

FEATURES

- Wide variety of coil types, and orifice sizes
- Neat, compact hexagonal design
- Integral flow adjustment - type RI

TECHNICAL DATA

Function:	2-way normally closed
Ports:	G1/8”
Ambient temp:	-20°C to +55°C
Fluid temp:	-10°C to max. temp. shown in table
Viscosity:	Max. 37 Cst. 5°E
Coil voltage:	See page 26
Voltage tolerance:	+/-10% (+10% -5% on pure DC)
Current Consumption:	See table
Duty cycle:	100% continuous rating
Response Time:	10-30ms
Cycling speed:	Max. 1500cpm
Body:	Stainless steel AISI 316
Inner Parts:	Stainless steel AISI 430 F
Shading ring:	Silver
Tube and body seal:	O-ring
Seals:	As listed

DIMENSIONS (mm)

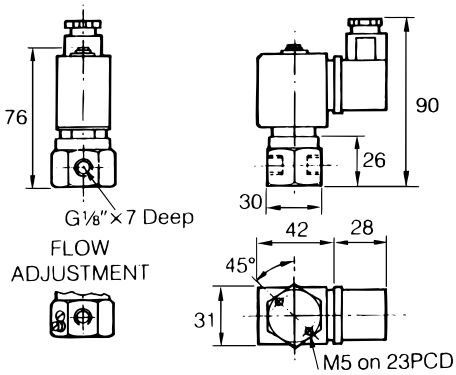

SEAL MATERIAL

V (Viton)	Max.140°C	Oils, petrol, hot water, steam
T* (Teflon PTFE)	Max.150°C	Some aggressive chemicals
*Replace PTFE O-ring each time valve is re-assembled		

COIL TYPES

Standard	max. temp. 120°C	Protection class IP65
High Temperature	max. temp. 150°C	Protection class IP65
High Power	max. temp. 160°C	Protection class IP65

COIL CONSUMPTION

Description	Standard	High Temp.	High Power
Inrush current, VA (AC)	25	25	43
Hold current, VA (AC)	14	14	27
Consumption W (DC)	8	8	14

FLOW AND PRESSURE RATING CHART (bar)

Orifice	Kv (m^3/h)	Coil 8 watt		Coil 14 watt	
		AC	DC	AC	DC
2.5	0.19	14	9	30	25
3.0	0.24	10	6	25	20
4.0	0.30	6	1.7	15	8

HOW TO ORDER

Example: 21L 1 K1 T 25 - RI + voltage

VALVE TYPE

PORT SIZE
1 G1/8”

FUNCTION
Normally closed

SPECIAL FEATURES
RI Flow regulations

ORIFICE SIZES
25 2.5mm
30 3.0mm
40 4.0mm

SEAL MATERIAL
T PTFE
V VITON

Note: order DIN connector separately.

Solenoid Valves

Direct-acting, Normally Closed, Stainless Steel
Type 21L2, 1/4”

APPLICATION

Normally closed solenoid valve with body and metal parts of stainless steel. Ports G1/4”

FEATURES

- Wide variety of coil types and orifice sizes
- Neat, compact design
- Coil replacement without exposing fluid

TECHNICAL DATA

Function:	2 way normally closed
Ports:	G1/4”
Ambient temp:	-20°C to +55°C
Fluid temp:	-40°C to +180°C
Viscosity:	Max. 37 Cst. 3°E
Coil voltage:	See page 26
Voltage tolerance:	+/-10% (+10% -5% pure DC)
Duty cycle:	100% continuous rating
Response time:	10 - 30ms
Cycling speed:	1500cpm
Body:	Stainless steel 316
Inner parts:	Stainless steel 430F

HOW TO ORDER

Example: 21L 2 K1 T 25 + voltage

VALVE TYPE

PORTS
2 G1/4”

FUNCTION
Normally closed

ORIFICE SIZES
25 2.5mm
30 3.0mm
40 4.0mm
55 5.5mm

SEAL MATERIAL
T PTFE
V VITON

DIMENSIONS (mm)

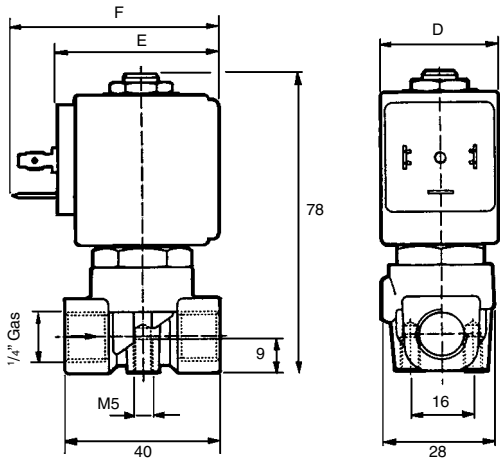

Coil	D mm	E mm	F mm
8W	30	42	54
14W	52	55	67

FLOW & PRESSURE RATING CHART (bar)

Pipe Size	Code	Fluid Temp.		Ø	Pressure bar Max			Watt	Kv m³/h
		Min°C	Max°C	10 -1mm	Min	AC	DC		
1/4”	21L2K1T25	-40	+180	25	0	14	9	8	0.19
1/4”	21L2K1T25	-40	+180	25	0	30	25	14	0.19
1/4”	21L2K1T30	-40	+180	30	0	10	6	8	0.24
1/4”	21L2K1T30	-40	+180	30	0	25	20	14	0.24
1/4”	21L2K1T40	-40	+180	40	0	6	1.7	8	0.30
1/4”	21L2K1T40	-40	+180	40	0	15	8	14	0.30
1/4”	21L2K1T55	-40	+180	55	0	3.5	1	8	0.54
1/4”	21L2K1T55	-40	+180	55	0	7	3	14	0.54

Solenoid Valves

Servo-acting, Normally Closed, Stainless Steel
Type 21X, 1/2" - 1"

APPLICATION

Servo-acting solenoid for on-off control of aggressive fluids compatable with materials of construction.
Minimum pressure drop of 0.5 bar required.

FEATURES

- Normally closed
- Coil replacement without exposing line fluid
- All 316 ST/ST

TECHNICAL DATA

Function:	Normally closed
Port sizes:	G1/2", 3/4", 1"
Ambient temp:	-20°C to +55°C
Fluid temp:	-20°C to 180°C
Viscosity:	Max. 21 Cst. 3°E
Materials:	Body and tube: 316 stainless steel; seals: PTFE as standard, Viton on request
Coil voltage:	See page 26
Voltage tolerance:	+/-10%
Duty cycle:	100% continuous rating
Protection class:	IP 65 to DIN 40050 with correctly assembled connectors
Cycling frequency:	200cpm

DIMENSIONS (mm)

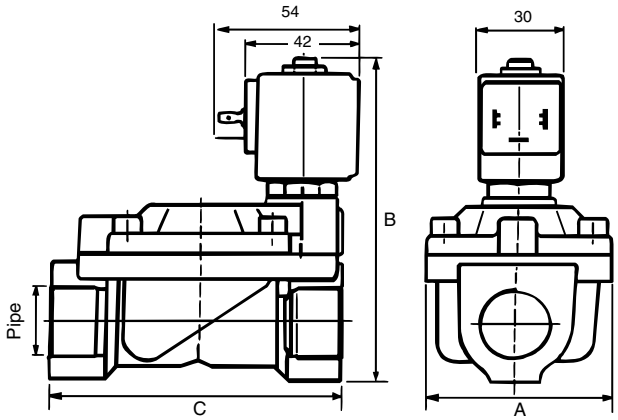

Code	Pipe	A mm	B mm	C mm
21X2KT120	1/2"	40	103	72
21X3KT190	3/4"	65	115	104
21X4KT250	1"	65	115	104

COIL CONSUMPTION

Description	Standard	High Temp.
Inrush current, VA(AC)	25	25
Holding current, VA(AC)	14	14
Power consumption W(AC/DC)	8	8

FLOW & PRESSURE RATING CHART (bar)

Code	Port Size	Fluid Temp.		Ø 10^{-1}mm	Pressure bar Max			Watt	Kv m^3/h	Body	Seal
		Min°C	Max°C		Min	AC	DC				
21X2KT120	1/2"	-30°C	+180°C	12	0.5	10	10	8	2.1	ST/ST	PTFE
21X3KT190	3/4"	-30°C	+180°C	19	0.5	10	10	8	7.2	ST/ST	PTFE
21X4KT250	1"	-30°C	+180°C	25	0.5	10	10	8	7.8	ST/ST	PTFE

Solenoid Valves

Coupled Diaphragm, Normally Closed, Stainless Steel, Type 21IH, 3/8" - 1 1/2"

APPLICATION

Solenoid valves Type 21IH are normally closed valves, energised to open and similar in design to servo-acting valves but with the diaphragm coupled to the solenoid plunger. This enables the valve to operate at zero pressure and without the need for a pressure differential, thus overcoming the problems associated with gravity feed systems.

FEATURES

- Operate from zero pressure, no differential required
- Coil replacement without exposing fluid

TYPES AVAILABLE

G 3/8" to 1 1/2", with 8 watt, 12 watt, 14 watt coils

TECHNICAL DATA

Ambient temp:	-10°C to +80°C
Fluid temp:	-10°C to +90°C NBR (+140°C Viton)
Viscosity:	Max. 21 Cst. 3°E
Materials:	Body: 316 stainless steel
Seal:	NBR or Viton
Coil voltage:	See page 26
Voltage tolerance:	+10% -5% DC +10% -15% AC
Consumption:	8 watts 25/14 VA 12 watts 35/25 VA 14 watts 43/27 VA
Duty cycle:	100% continuous rating
Protection class:	IP 65 to DIN 40050 with correctly assembled connectors

DIMENSIONS (mm)

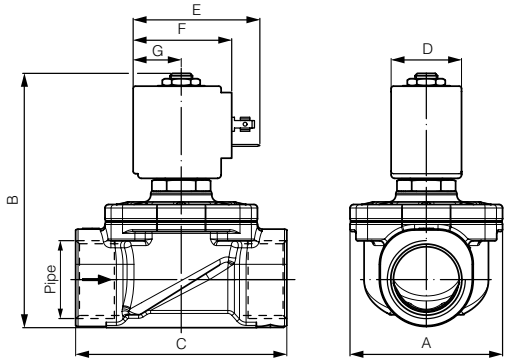

Code	A mm	B mm	C mm
21IH3K1V150	52	92	68
21IH4K1V160	52	92	68
21IH5K1V200	58	100	75
21IH6K1V250	65	109	90
21IH7K1V350	94	126	128
21IH8K1V400	94	126	128

Coil	W mm	D mm	E mm	F mm	G mm
B	8	30	42	54	20.5
U	12	36	48	60	23.5
G	14	52	55	67	25

FLOW & PRESSURE RATING CHART (bar)

Code	Ports	Orifice	Watt	Min	AC	DC	Kv*
21IH3K1V150	3/8"	15	8	0	14	6	2.4
21IH3K1V150	3/8"	15	12	0	-	14	2.4
21IH4K1V160	1/2"	16	8	0	14	6	3
21IH4K1V160	1/2"	16	12	0	-	14	3
21IH5K1V200	3/4"	20	8	0	-	6	3.6
21IH5K1V200	3/4"	20	12	0	-	14	3.6
21IH6K1V250	1"	25	8	0	13	3	8.4
21IH6K1V250	1"	25	12	0	-	8	8.4
21IH6K1V250	1"	25	14	0	-	14	8.4
21IH7K1V350	1 1/4"	35	14	0	14	7	18
21IH8K1V400	1 1/2"	40	14	0	14	7	21

*Kv measured in m^3/h water at 1 barΔP